22. Reverse Idler Gear Assembly

A: REMOVAL

1) Remove the manual transmission assembly from the vehicle. <Ref. to 6MT-34, REMOVAL, Manual Transmission Assembly.>
2) Prepare the transmission for overhaul. <Ref. to 6MT-39, Preparation for Overhaul.>
3) Remove the oil pipe, neutral position switch, back-up light switch and harness. <Ref. to 6MT-41, REMOVAL, Oil Pipe.> <Ref. to 6MT-43, REMOVAL, Neutral Position Switch.> <Ref. to 6MT-42, REMOVAL, Back-up Light Switch.>
4) Remove the extension case. <Ref. to 6MT-44, REMOVAL, Extension Case.>
5) Remove the transfer driven gear. <Ref. to 6MT-56, REMOVAL, Transfer Driven Gear.>
6) Remove the center differential. <Ref. to 6MT-58, REMOVAL, Center Differential.>
7) Remove the oil pump. <Ref. to 6MT-59, REMOVAL, Oil Pump.>
8) Remove the transmission case. <Ref. to 6MT-63, REMOVAL, Transmission Case.>
9) Remove the reverse idler gear assembly. <Ref. to 6MT-68, REMOVAL, Main Shaft Assembly.>

B: INSTALLATION

1) Select the reverse fork rod. <Ref. to 6MT-113, ADJUSTMENT, Shifter Fork and Rod.>
2) Install the reverse idler gear assembly. <Ref. to 6MT-69, INSTALLATION, Main Shaft Assembly.>
3) Install the transmission case. <Ref. to 6MT-64, INSTALLATION, Transmission Case.>
4) Install the oil pump. <Ref. to 6MT-61, INSTALLATION, Oil Pump.>
5) Install the center differential. <Ref. to 6MT-58, INSTALLATION, Center Differential.>
6) Install the transfer driven gear. <Ref. to 6MT-56, INSTALLATION, Transfer Driven Gear.>
7) Install the extension case. <Ref. to 6MT-44, INSTALLATION, Extension Case.>
8) Install the oil pipe, neutral position switch, back-up light switch and harness. <Ref. to 6MT-41, INSTALLATION, Oil Pipe.> <Ref. to 6MT-43, INSTALLATION, Neutral Position Switch.> <Ref. to 6MT-42, INSTALLATION, Back-up Light Switch.>
9) Install the manual transmission assembly to the vehicle. <Ref. to 6MT-36, INSTALLATION, Manual Transmission Assembly.>

C: DISASSEMBLY

NOTE:
Sleeves and reverse gears meet at a specified position. Before disassembly, mark the meeting position of the sleeve and hub.

1) Remove the spring pin.

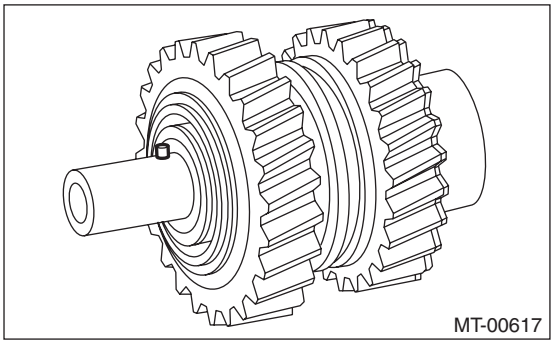

2) Remove the snap ring.

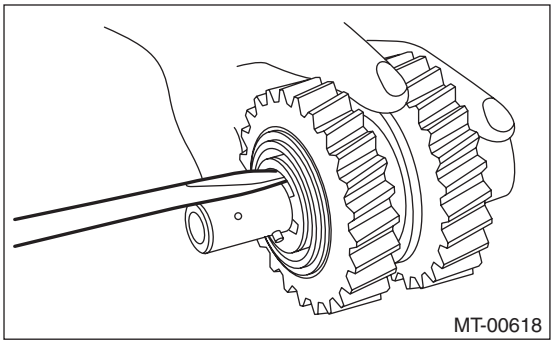

3) Remove the washer and reverse idler gear.

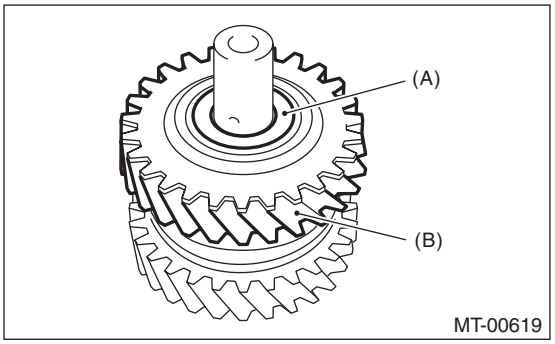

(A) Washer
(B) Reverse idler gear

4) Remove the knock pin and reverse idler gear needle bearing.

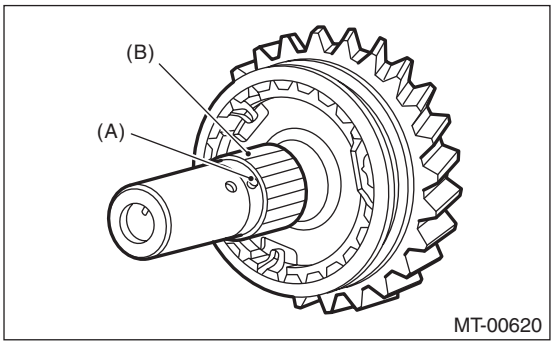

(A) Knock pin
(B) Reverse idler gear needle bearing

5) Remove the collar.

6) Remove the reverse sleeve.

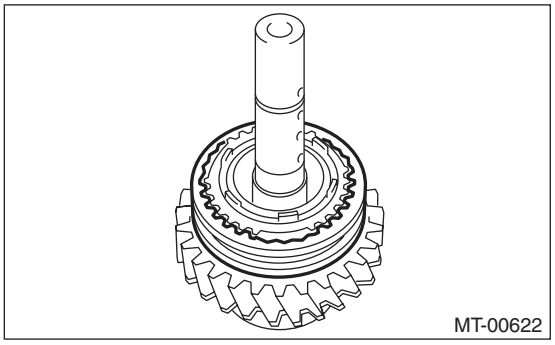

7) Remove the outer baulk ring, reverse synchro cone and inner baulk ring from the reverse sleeve.

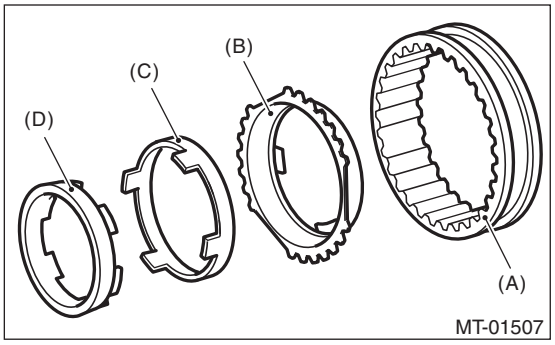

(A) Reverse sleeve
(B) Outer baulk ring
(C) Reverse synchro cone
(D) Inner baulk ring

8) Remove reverse idler gear No. 2.

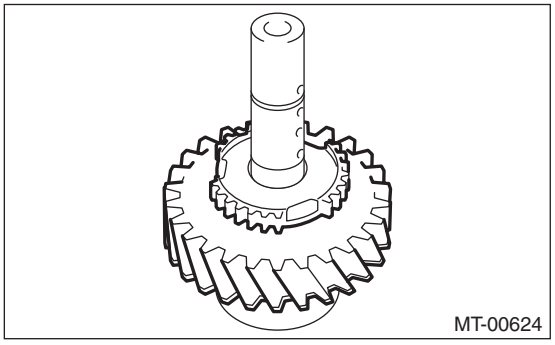

9) Remove the washer and needle bearing.

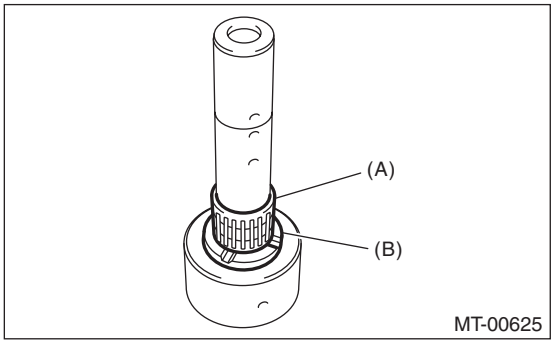

(A) Needle bearing
(B) Washer

10) Remove the knock pin.

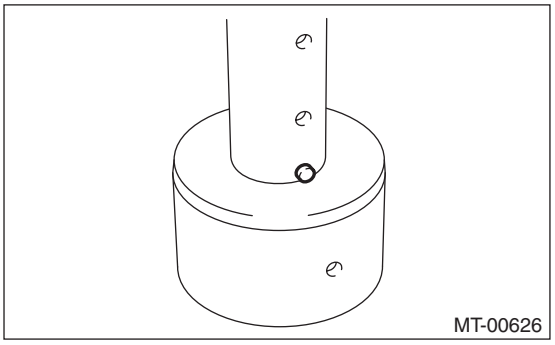

11) Remove the snap ring and friction plate from reverse gear.

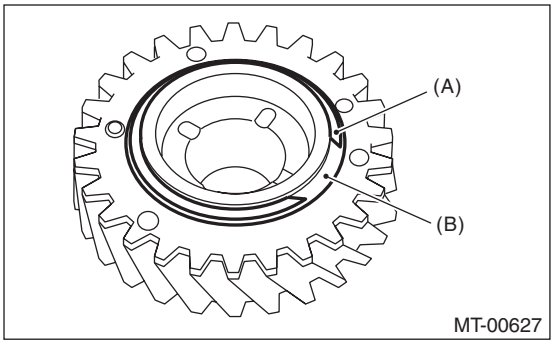

(A) Snap ring
(B) Friction plate

12) Remove the sub gear and spring.

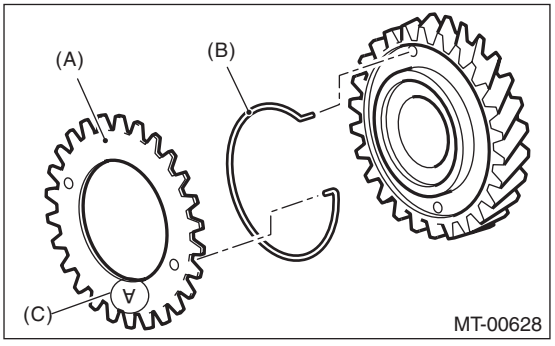

(A) Sub gear
(B) Spring
(C) Stamp (Marking A)

D: ASSEMBLY

1) Attach the sub gear and spring.

NOTE:

- Turn the white marking on the hook section towards the sub gear side, and attach the spring.
- Point the stamp (marking A) towards the outside, and install the sub gear.

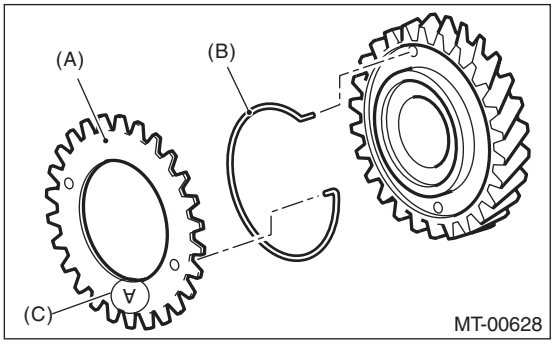

(A) Sub gear
(B) Spring
(C) Stamp (Marking A)

- While paying attention to the direction of the sub gear attachment hole, attach the spring and sub gear.

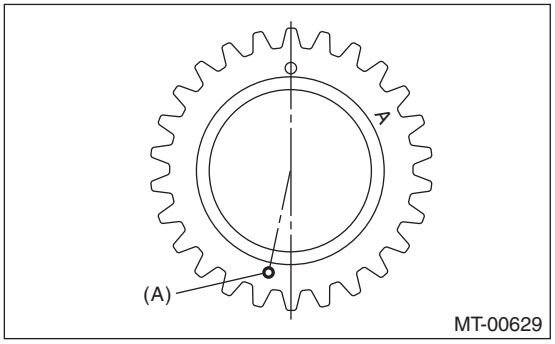

(A) Attachment hole

2) Install the friction plate and snap ring.

NOTE:

Confirm that the friction plate is installed in the proper direction.

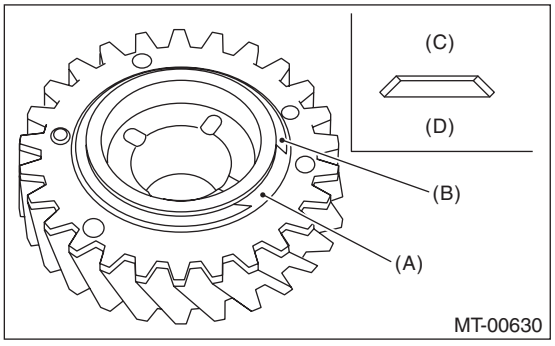

(A) Friction plate
(B) Snap ring
(C) Snap ring side
(D) Sub gear side

3) Apply adequate gear oil to the shaft, needle bearing and reverse drive gear inner surface.

4) Install the knock pin.

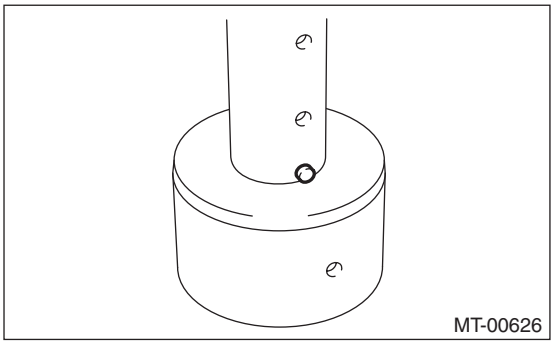

5) Install the washer and the needle bearing.

NOTE:

Point the groove towards the reverse idler gear, and attach the washer.

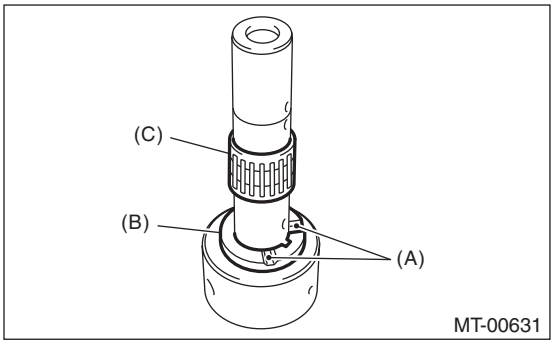

(A) Groove
(B) Washer
(C) Needle bearing

6) Install the reverse idler gear No. 2.

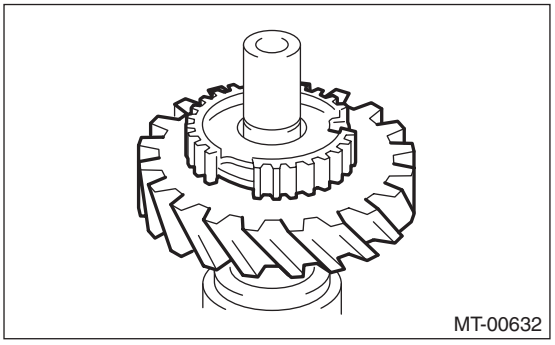

7) Attach the shifting insert key to the appropriate location of the reverse sleeve.

NOTE:
The angle of each shifting insert key is 120°.

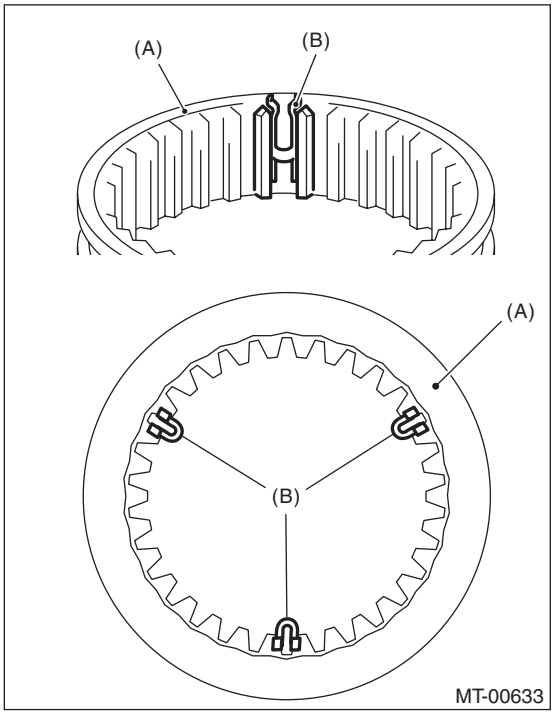

(A) Reverse sleeve
(B) Shifting insert key

8) Attach the reverse sleeve to the reverse idler gear No. 2.

NOTE:
Confirm that the reverse sleeve is installed in the proper direction.

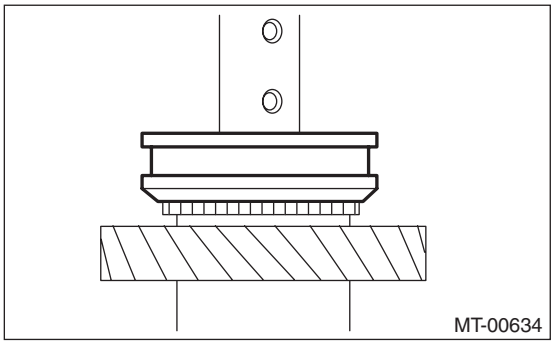

9) Apply adequate gear oil to the collar, needle bearing and reverse drive gear inner surface.

10) Install the outer baulk ring, reverse synchro cone and inner baulk ring.

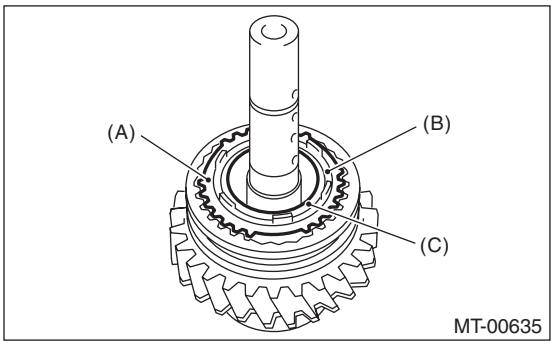

(A) Outer baulk ring
(B) Reverse synchro cone
(C) Inner baulk ring

11) Install the collar and needle bearing, then the knock pin.

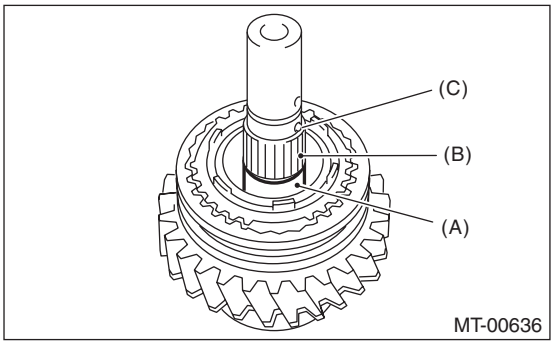

(A) Collar
(B) Needle bearing
(C) Knock pin

12) Match the protrusion of the reverse synchro cone to the hole on the reverse idler gear, and install the reverse idler gear.

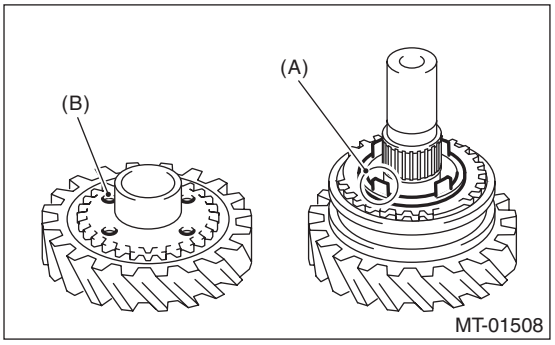

(A) Protrusion on the reverse synchro cone
(B) Hole of the reverse idler gear

13) Point the groove towards the reverse idler gear, and attach the washer.

14) Using the ST, install the snap ring.
ST 18672AA000 GUIDE CLIP

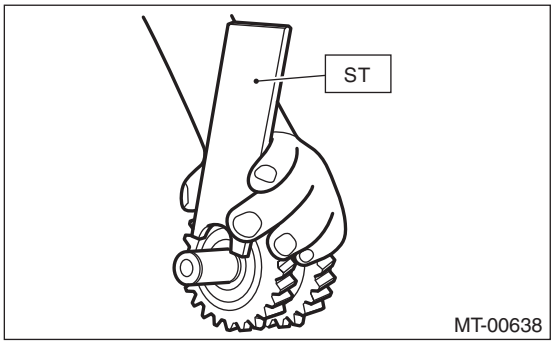

15) Inspect and adjust the clearance between the snap ring and the washer. <Ref. to 6MT-93, INSPECTION, Reverse Idler Gear Assembly.>
16) Install a new spring pin.

E: INSPECTION

Disassembled parts should be washed with water first and then inspected carefully.
1) Bearing
Replace the bearings in the following cases.
- Bearing wear, rusting or damage
- If the bearing does not rotate smoothly or an abnormal noise is emitted when turning.
- When the bearing has other defects

2) Bushing (each gear)
Replace the bushing in following cases.
- When gear sliding surfaces are damaged or excessively worn.

3) Gear
Replace gears in the following cases.
- When gear teeth are damaged or excessively worn.
- If the contact area of the baulk ring is damaged.
- If the inner face of the gear is worn.

4) Baulk ring, synchro cone
Replace the baulk ring and synchro cone in following cases:
Baulk ring wear, rusting or damage
5) Shifting insert key
Replace the shifting insert key if deformed, excessively worn or defective in any way.

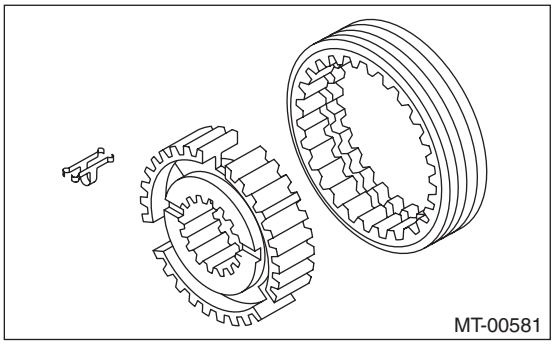

6) Check clearance between the snap ring and washer.

Clearance specification:
0.1 — 0.3 mm (0.0039 — 0.0118 in)

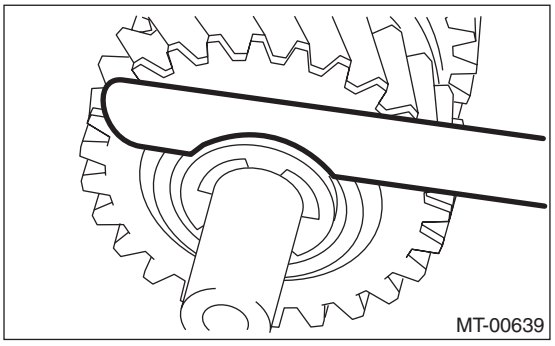

If the clearance is out of the specification, select a snap ring from the following table and perform replacement.

Snap ring	
Part No.	Thickness mm (in)
031319000	1.50 (0.059)
805019030	1.60 (0.062)
805019010	1.72 (0.068)

After replacing the snap ring, inspect the clearance.